TGM 18.250-320 4x4 BL CH

WARRANTY

Term coverage	1 year entire vehicle
Km coverage	Unlimited
Term coverage	2 year driveline
Km coverage	Unlimited

ROADSIDE ASSISTANCE

Term coverage	48 months
Km coverage	Unlimited

ENGINE

Model	D08
Displacement	6.9 L
D0836 LFLBK	184 kW (250 hp) at 2,200 rpm 1,050 Nm at 1,200 - 1,600 rpm
D0836 LFLBJ	213 kW (290 hp) at 2,200 rpm 1,150 Nm at 1,200 - 1,700 rpm
D0836 LFLBI	235 kW (320 hp) at 2,200 rpm 1,250 Nm at 1,200 - 1,700 rpm
Bore + stroke	108 mm + 125 mm
Compression ratio	16.5:1
Fuel injection	Electronically controlled, common rail
Emission level	Euro VI E
Engine brake output	185 kW
Oil sump gradeability	60%
Cooling system protection	Lower radiator protection

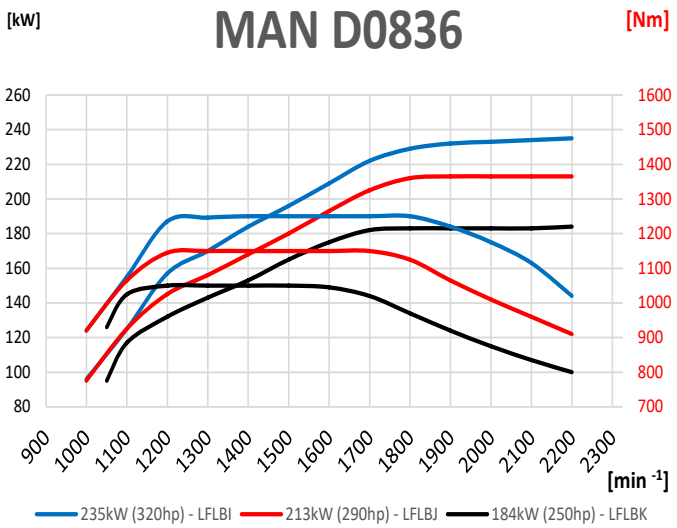

MASS LIMITS

GVM	18,000 kg
GCM	33,000 kg

PERFORMANCE

Engine rpm @ 100 km / h	1,936
Road speed limiter	100 km/h
Startability @ GVM	47.98%
Startability @ GCM	24.02%
Gradeability GVM (90km p/h)	3.12%
Gradeability GCM (90km p/h)	1.47%

EMISSION CONTROL

Emission control	CRT particulate filter + SCR
Adblue capacity	35 L (CC, TN cabins)
Optional:	27 L (DN cabin)
Adblue tank	Plastic, RHS chassis-mounted Lockable cap with master key
Exhaust system	RHS chassis mounted
Outlet	Towards middle of frame

FUEL SYSTEMS

Fuel filter	For fuels to class 21
Fuel pre filter	Oil separ / water trap with water sensor, frame mounted
Fuel capacity	300 L, 150 L < 3,900 mm WB
Fuel tank	Steel, RHS chassis mounted Lockable cap with master key

TRANSMISSION

Description	Automatic transmission
Make & model	MAN Powermatic 08.13 OD
Shift type	Steering column stalk
Gear ratios	1st : 4.89 5th: 1.25 2nd: 3.12 6th: 1.00 3rd : 2.03 7th: 0.84 4th : 1.64 8th: 0.64 R1 : 4.25
Gearbox programming	Idle speed driving Efficiency driving program Off-road shift strategy
Transfer case	G102 with on & off-road gear
Transfer case type	Permanent
Optional:	Engageable
Transfer case managment	Electronic

TGM 18.250-320 4x4 BL CH

POWER TAKE OFF

Rear engine PTO	Without
Optional:	Flange type DIN ISO spline type
Gearbox PTO	Preparation only
Mounting positions	11 o'clock + 3 o'clock
Optional:	With and without flange types available

BODY INTERFACING

Interfacing	Body power supply, rear front panel Digital data exchange Vehicle date (FMS) Extended signal output (EIO)
Electrical preparation	16 pin & 18 pin plugs, keypad preparation Body control in instrument panel (CANbus) Bank of 6 blank switches

ELECTRICAL SYSTEMS

Batteries	2 x 180 Ah long-life maintenance free
Battery location	LHS chassis
Battery master switch	Mechanical
Battery box	Medium, lockable
Alternator	3 phase 28 V, 120 A, 3,360 W
Alternator type	Local interconnected network (LIN)

AIR & BRAKING SYSTEMS

Air intake position	Behind cabin, raised
Engine air intake type	Pre-separator
Engine dry air filter	With safety insert
Air compressor	1 cyl, 318 cm with economy system
Air dryer	1 cyl heated
Compressed air tank	Steel
Compressed air treatment	Electronically controlled
Brake system	Electronic braking system (EBS)
Anti-lock braking system	With off-road logic
Engine valve brake	Electronically controlled with stages
Park brake control	Pnuematic, next to drivers seat
Optional:	Electronic, in dash
Anti-jacknife brake control	Pnuematic, next to drivers seat
Hill hold	MAN easy start with hill climb brake
Wheel brakes	Drum brakes front and rear

STEERING

Type	Hydraulic
Column	Telescopic, tilt adjust & parking position
Steering wheel	500 mm diameter, with steering lock multifunction consisting of: • Menu operation • Voice control • Infotainment operation • Driver assistance settings • Phone control

TOWING EQUIPMENT

Air supply	2-line trailer brake connection, end frame
Trailer sockets	24 V, 7 + 7 pin end of frame Antilock braking system end of frame

FRONT AXLE & SUSPENSION

Front axle model	VP09, driven planetary axle
Type	Straight, permanent
Capacity	9,000 kg
Differential locks	With
Suspension	2-leaf parabolic
Suspension rating	7,500 kg
Shock absorbers	With
Stabiliser	Torsion bar spring

REAR AXLE & SUSPENSION

Rear axle model	HP-1333, driven planetary axle
Type	Straight, permanent
Capacity	13,000 kg
Differential locks	With
Suspension	4-leaf parabolic
Suspension rating	11,500 kg
Shock absorbers	With
Stabiliser	Torsion bar spring
Rear axle ratio	6.0
Optional:	5.7, 5.33, 4.83

FRAME

Wheelbase / Overhang	4,500 mm / 2,325 mm
Frame design	High
Frame dimensions	220 mm x 70 mm x 7.8 mm
Vehicle frame end	Straight
Tensile strength	Rm (MPA) min 480 - 620
Rear cross member	Prepared for trailer coupling
Front tow point	Central jaw integrated into bumper
Frame paint	Black - RAL 9011
Spare wheel hoist	Provisionally mounted
Wheel chocks	2 units with retaining device
Taillights	LED
Side marker lights	LED

SAFETY FEATURES

Driver assistance systems	Emergency braking signal, automatic VSM transfercase management Light function test
Optional:	Reversing motion system MAN attention guard Anti slip regulator (ASR) Electronic stability program (ESP) Emergency brake assist II plus (EBA) Adaptive cruise control (ACC) Lane guard system (LGS) Front detection Distance warning system

WHEEL EQUIPMENT

Front rims	9.00" 22.5 8-hole steel rim
Front tyres	315 / 80 R steer, on-off road tread
Rear rims	9.00" 22.5 8-hole steel rim
Rear tyres	315 / 80 R dual dirive, on-off road tread
Spare rim	9.00" 22.5 8-hole steel rim
Spare tyre	315 / 80 R steer, on-off road tread

TGM 18.250-320 4x4 BL CH

CABIN EXTERIOR

Cabin strength rating	ECE R29.3 cabin strength
Cabin	CC: Narrow, short, normal height
Optional:	TN: Narrow, long, normal height DN: Narrow, extra long, normal height
Cab tilting	Manual
Cab suspension	Mechanical spring
Optional:	Airbag - (TN & DN only)
Rear window	With
Optional:	Without Without with wall storage (TN only)
Front bumper	Steel, 3-piece
Exterior rear view mirrors	Electric + heated with manoevering aid
Front view mirror	1 x mechanically adjustable 1 x left side, electronically adjustable
External Sunvisor	Single piece
Cabin paint	White - RAL 9016
Bumper & step paint	Textured
Cabin aerokit	None
Optional:	Roof foil (CC & TN only)
Windscreen	Composite safety glass, tinted
Windscreen wipers	Manual wiper activation
Optional:	Automatic rain sensing activation
Step units	Hinged
Headlights	H7 bulb with fine & wide mesh protection
Optional:	LED
Daytime running lights	LED
Turn signals	LED
Driving light control	Manual
Optional:	Automatic with light sensor
High-beam headlight opperation	Manual
Optional:	Assisted
Horn	Single tone, electric Compressed air, roof mounted x 2

CABIN MEASUREMENTS

Cabin	CC Cabin	TN Cabin	DN Cabin
Type	Day	Sleeper	Crew
Exterior length	1,620 mm	2,280 mm	1,620 mm
Exterior width	2,240 mm	2,240 mm	2,240 mm
Interior length	1,550 mm	2,145 mm	1,550 mm
Interior width	2,070 mm	2,070 mm	2,070 mm
Height of engine tunnel	260 mm	280 mm	260 mm
Interior height above engine tunnel	1,280 mm	1,410 mm	1,280 mm
Interior height in front co-driver seat	1,585 mm	1,650 mm	1,585 mm
Length of bed	-	1,960 mm	-
Width of bed	-	800 mm	-
Roof stowage units	27 L	41 L	27 L
Storage box rear left	-	208 L	-
Storage box rear right	-	242 L	-
Storage facility under bed central	-	133 L	-

CABIN INTERIOR

Colour scheme	Dark moon grey with silver accents
Internal sun blind	Folding type - driver & co-driver
Door glare protection	Roller blind for driver & co-driver doors
Interior lighting	H7 bulb
Optional:	LED
Roof storage	27 L with 4 x single DIN slots
Optional:	41 L (TN & DN only)
Rear storage	Rear wall, driver & co-driver side, x 2
Optional:	Storage box Coolbox
Sockets	2 units 12 V & 24 V, cab centre
Instrumentation	12.3” digital dash
Bunk	Without
Optional:	1 bunk, 800 mm width, 90 mm mattress
Seating capacity	2
Optional:	3 (CC & TN only) 6/7 (DN only)
Driver seat	Comfort, air spring with lumbar and shoulder adjustment, seat ventiation, seat belt adjustment
Seat belt	3-point lap sash
Co-driver seat	Comfort, air sprung
Seat belt	3-point lap sash
Seat belt indicator	Driver side
Air conditioning	Climate control with pre separator air intake
Infotainment	Advanced mid media system Low reflection 7” colour HD display Bluetooth for 2 x mobile phones Smart phone integration AM/FM/DAB/DAB+ Navigation maps Reverse camera input
Sound system	2 x door broadband loundspeakers 2 x A pillar tweeters 2 x door bass loundspeakers
Optional:	Subwoofer (TN only)

TGM 18.250-320 4x4 BL CH

CHASSIS WEIGHTS

	CC cab: Weights			TN cab: Weights			DN cab: Weights			Turning	
Wheelbase	Front kg	Rear kg	Total kg	Front kg	Rear kg	Total kg	Front kg	Rear kg	Total kg	Kerb	Wall
3,600 mm	4,215	2,038	6,253	4,333	2,001	6,334	4,368	2,169	6,537	13.3	15
3,900 mm	4,225	2,073	6,298	4,407	2,107	6,514	4,443	2,260	6,703	14.7	16.1
4,500 mm	4,256	2,127	6,383	4,443	2,156	6,599	4,530	2,341	6,871	16.2	17.9

CHASSIS DIMENSIONS

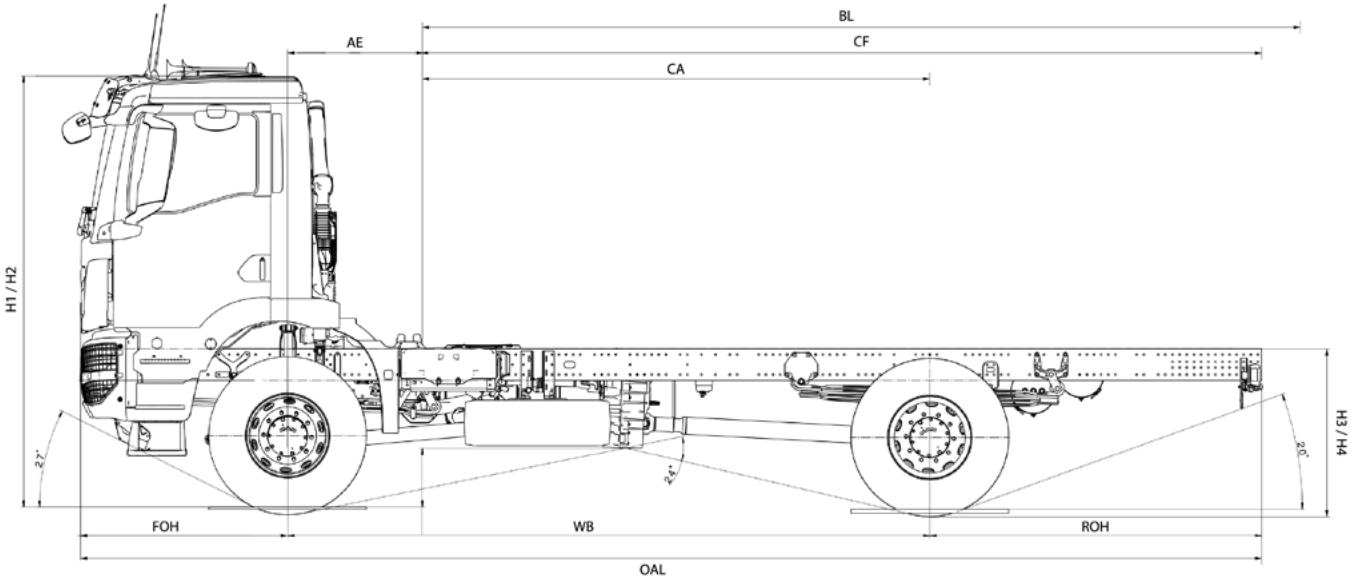

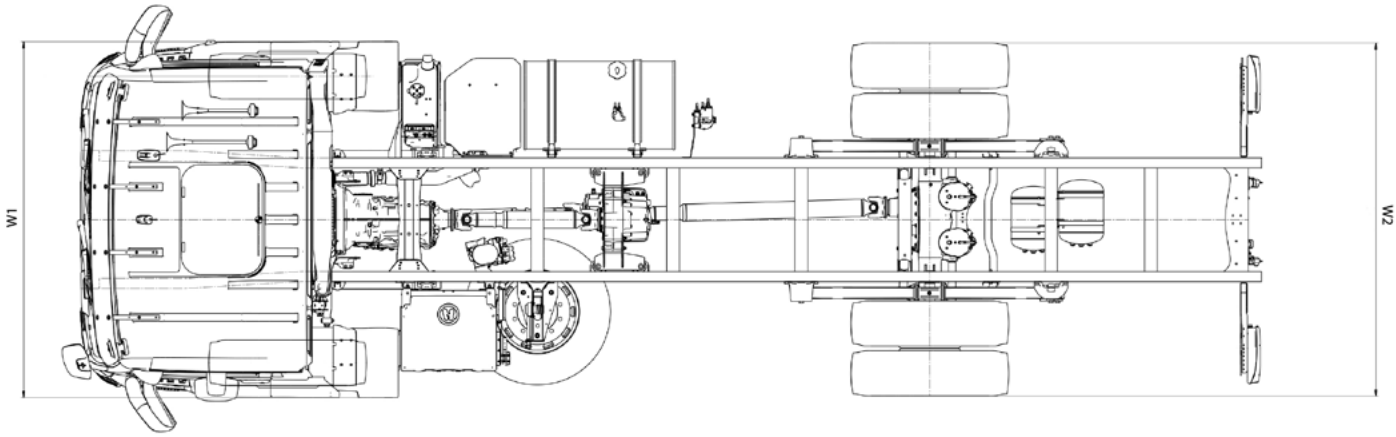

CC cab: Longitudinal dimensions (mm)							
							Max
Wheelbase	FOH	ROH	OAL	CA	CF	AE	BL
3,600 mm	1,450	1,775	6,825	3,209	4,984	391	5,369
3,900 mm	1,450	1,925	7,275	3,509	5,434	391	5,849
4,500 mm	1,450	2,325	8,275	4,109	6,434	391	6,809

CC cab: Height dimensions (mm)					
Empty	Loaded	Empty	Loaded		
H1	H2	H3	H4	W1	W2
3,266	3,178	1,244	1,115	2,489	2,470
3,266	3,178	1,244	1,115	2,489	2,470
3,266	3,178	1,244	1,115	2,489	2,470

TN cab: Longitudinal dimensions (mm)							
							Max
Wheelbase	FOH	ROH	OAL	CA	CF	AE	BL
3,600 mm	1,450	1,775	6,825	2,710	4,485	890	4,870
3,900 mm	1,450	1,925	7,275	3,010	4,935	890	5,350
4,500 mm	1,450	2,325	8,275	3,610	5,935	890	6,310

TN cab: Height dimensions (mm)					
Empty	Loaded	Empty	Loaded		
H1	H2	H3	H4	W1	W2
3,321	3,238	1,244	1,115	2,489	2,470
3,321	3,238	1,244	1,115	2,489	2,470
3,321	3,238	1,244	1,115	2,489	2,470

DN cab: Longitudinal dimensions (mm)							
							Max
Wheelbase	FOH	ROH	OAL	CA	CF	AE	BL
3,600 mm	1,450	1,775	6,825	1,996	3,771	1,604	4,156
3,900 mm	1,450	1,925	7,275	2,296	4,221	1,604	4,636
4,500 mm	1,450	2,325	8,275	2,896	5,221	1,604	5,596

DN cab: Height dimensions (mm)					
Empty	Loaded	Empty	Loaded		
H1	H2	H3	H4	W1	W2
3,319	3,238	1,244	1,115	2,489	2,470
3,319	3,238	1,244	1,115	2,489	2,470
3,319	3,238	1,244	1,115	2,489	2,470